Dynamics of Electrical Machines and Drives

DC motor drive

Matteo Benvenuti

What is an Electrical Drive

Industrial Terminology

The standard from «*Comitato Elettrotecnico Italiano*»:

CEI 301-1

An electrical drive system is a system which converts electric energy into mechanical energy, by making use of power electronic apparatuses, following an input function (and according to estabilished programmes)

However, the industrial terminology refers to an electrical drive as combination of power converter stage and motor stage.

Hence, it refers instrinsically to motor oriented applications (rotating element based) mainly dealing with:

- Traction (train, subtrain, trolley bus)
- Industrial processes (compressor, distillation tower, fluid handling)
- Motorsport (formula-E, KERS)

Industrial Aspect

Example of MV-Drive

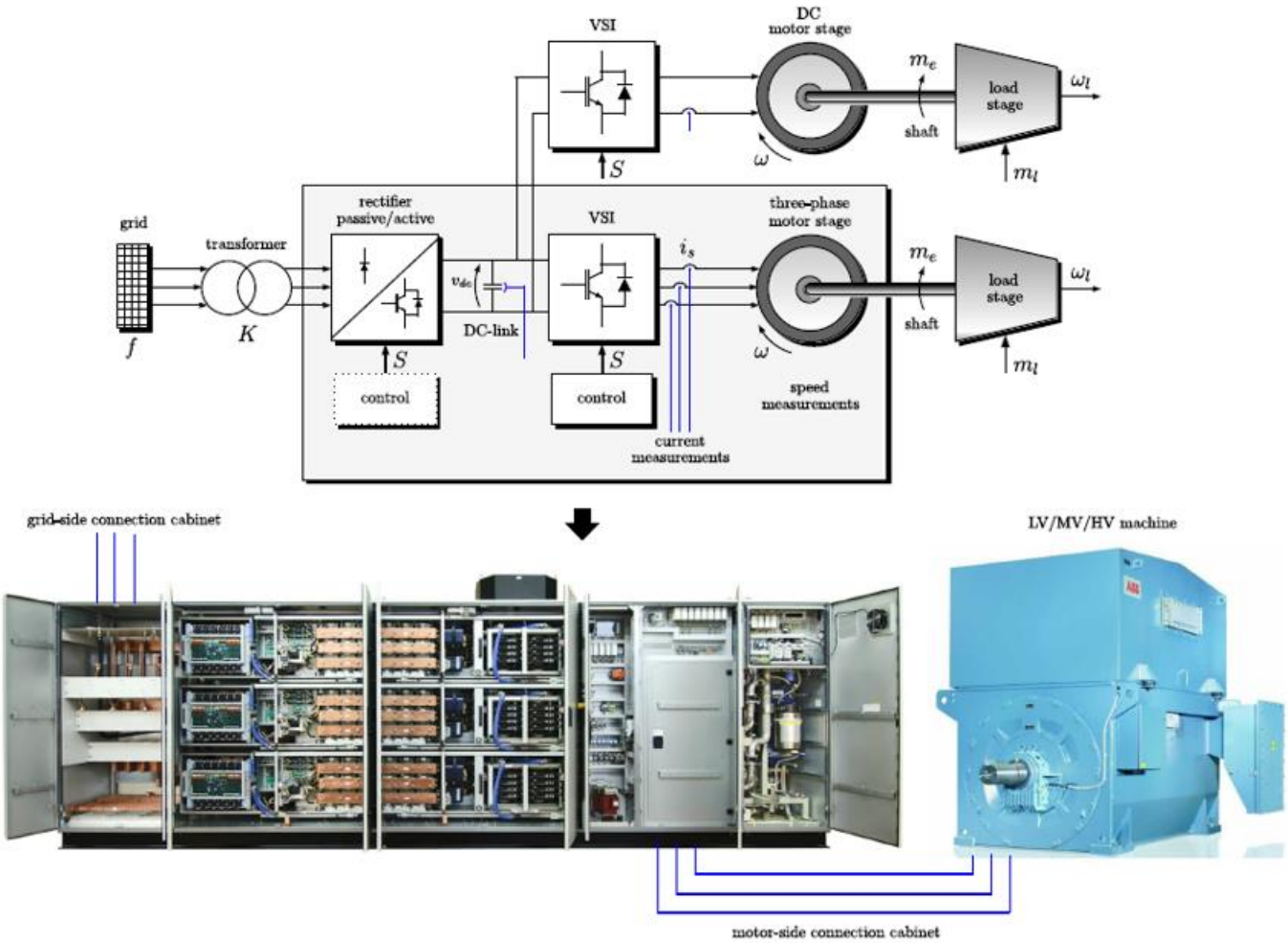

PM-DC Motor #1

Dynamical Model

Consider a **Permanent Magnet DC motor**:

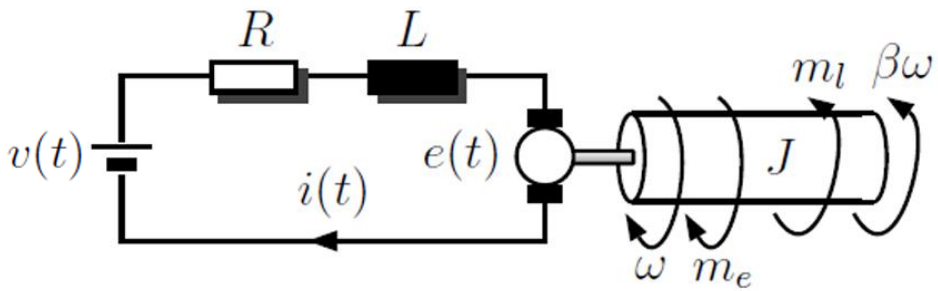

Electrical part:

$$L * \frac{di(t)}{dt} + R * i(t) + e(t) = v(t)$$

The back-emf $e(t)$ is proportional to the motor speed: $e(t) = K * \omega(t)$

Mechanical part:

$$J * \frac{d\omega(t)}{dt} + \beta * \omega(t) = m_e(t) - m_l(t)$$

The torque $m_e(t)$ is proportional to the armature current: $m_e(t) = K * i(t)$

From these equations, **different state space models could be built according to which output needs to be analyzed and controlled**

PM-DC Motor #2

Choice of state variables

Accordingly to the assumptions of:

- An input voltage source $v(t)$
- A known load torque $m_l(t)$
- A measurable armature current $i(t)$
- A measurable rotor speed $\omega(t)$

$$\frac{di(t)}{dt} = -\frac{R}{L} * i(t) - \frac{K}{L} * \omega(t) + \frac{1}{L} * v(t)$$

$$\frac{d\omega(t)}{dt} = -\frac{\beta}{J} * \omega(t) + \frac{K}{J} i(t) - \frac{1}{J} m_l(t)$$

$$y = x = \begin{bmatrix} x_1 \\ x_2 \end{bmatrix} = \begin{bmatrix} \omega \\ i \end{bmatrix}$$

$$u = \begin{bmatrix} m_l \\ v \end{bmatrix}$$

The space model is written as follows:

$$\dot{x}(t) = \underbrace{\begin{bmatrix} -\frac{\beta}{J} & \frac{K}{J} \\ -\frac{K}{L} & -\frac{R}{L} \end{bmatrix}}_{\mathbf{A}} * x(t) + \underbrace{\begin{bmatrix} -\frac{1}{J} & 0 \\ 0 & \frac{1}{L} \end{bmatrix}}_{\mathbf{B}} * u(t)$$

$$y(t) = \underbrace{\begin{bmatrix} 1 & 0 \\ 0 & 1 \end{bmatrix}}_{\mathbf{C}} * x(t)$$

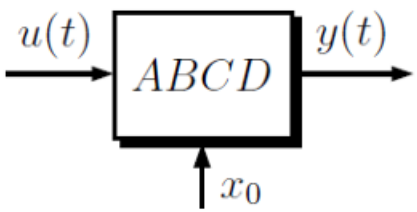

Control Strategy

Transfer Functions

Starting from the previous model, the **block schemes** are the following:

State-space model

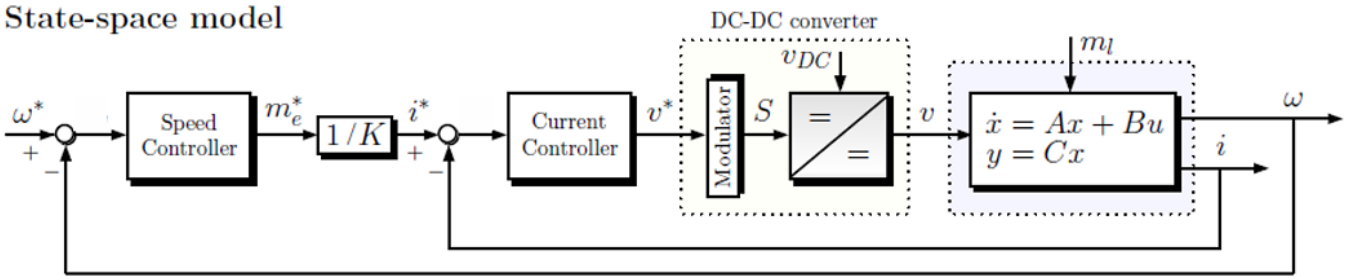

Linear model

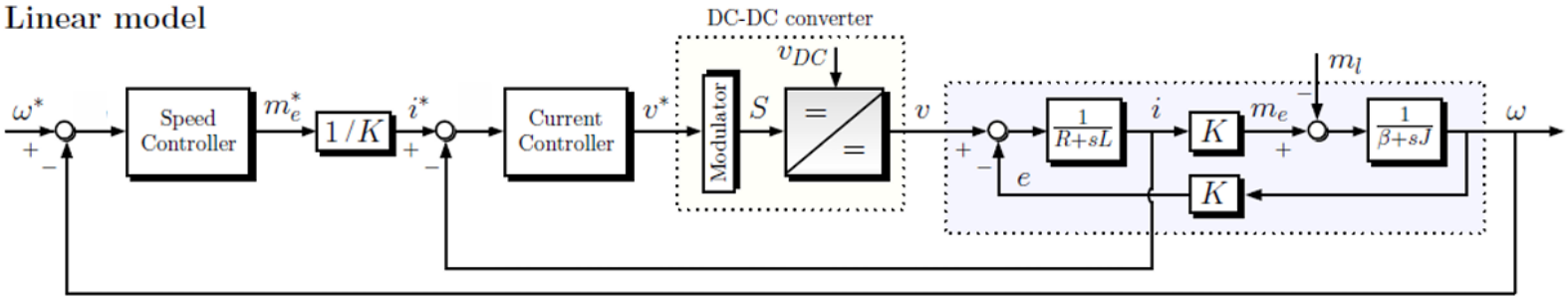

Remark: state space models graphically hide the coupling effects (they consider them inside matrices)

Decoupling Method

Back-emf compensation

From the previous figure, note that the **electrical dynamic and the mechanical dynamic are coupled through the back-emf**

Assuming to have a good speed estimator or a speed sensor, **a feedforward action can be added** providing a back-emf compensation $\hat{e}(t)$ and, thus, **decoupling the dynamics**

$$\hat{e}(t) = \hat{K} * \omega(t)$$

Feedforward term

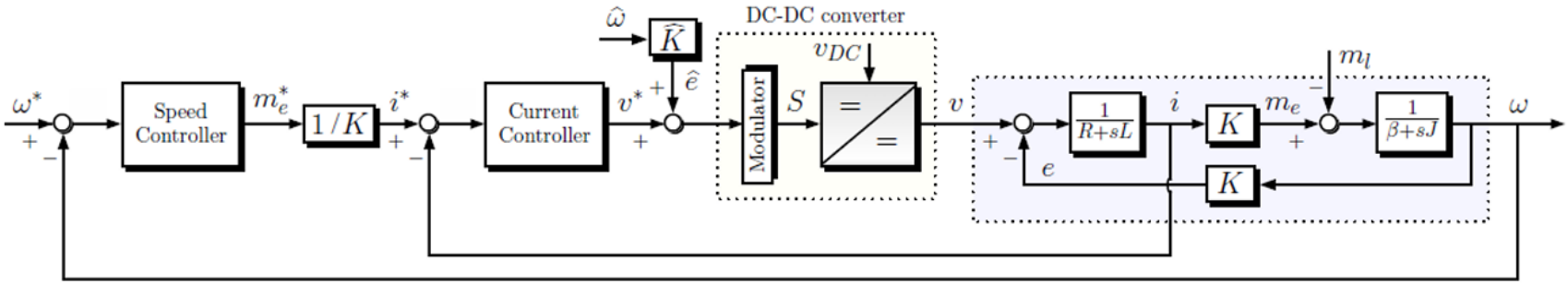

Remark: back-emf compensation takes effect only at steady-state.

Cascade Control Approach

Decoupling Method

Now the two dynamics are effectively decoupled.

Now the **two PI controllers** $(k_p + \frac{k_i}{s})$ can be designed indipendently:

$$G_\omega(s) = \frac{1}{\beta + sJ} \rightarrow L_\omega(s)$$ **Speed Control $R_\omega(s)$**

$$G_i(s) = \frac{1}{R + sL} \rightarrow L_i(s)$$ **Current Control $R_i(s)$**

Remember the **cascade loop theory**: (brief remark)

The outer loop must be **at least one decade slower** then the inner loop to see a unitary closed loop transfer function for the inner one

This imply at least $\omega_\omega \leq \frac{\omega_i}{10}$ to see $F_i = 1$ from the speed control loop

Exercise

Speed Control of a PM-DC Motor

Simulink:

A DC motor equipped with a speed sensor has to follow a step-command speed reference from 0 to 300 rad/s.

Assume a load torque as a step-command from 0 to 3Nm at the time istant 0.05s

Select a proper bandwidth for the two control loop able to present phase margin $\varphi_m \geq 60°$ and cascade constraints

system parameters					
R	$0.6\ \Omega$	K	$0.04\ (Nm/A)(Vs/rad)$	β	$0.01\ Nms/rad$
L	$0.002\ H$	J	$6 \cdot 10^{-5}\ kgm^2$	f_{sw}	$10\ kHz$

Write a MATLAB script to compute k_p and k_i given the motor parameter and/or use the automatic tool.

Exercise

Speed Control of a PM-DC Motor (2/2)

Which loop has to be designed first?

Note that no requirements are present on the settling time of the dynamical response (both for speed and current). Due to this, the design can start from inner loop as well as the outer one without drawbacks.

However, in presence of constraints on the settling time of the closed-loop speed response, starting from the innermost loop is recommended.

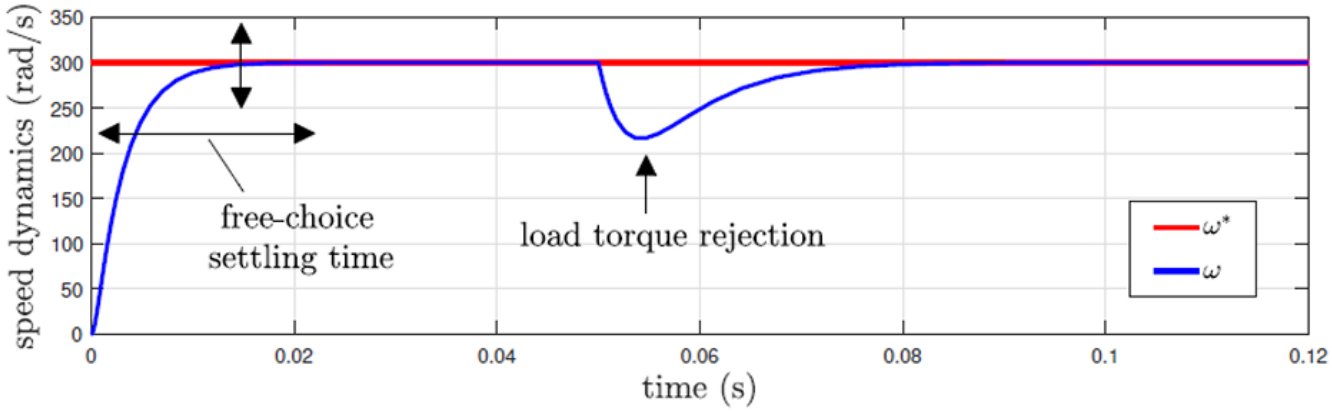

Separately Excited DC Motor

Dynamical Model

Consider now a **separately excited DC motor**: (armature circuit + excitation circuit)

Electrical part.

$$L_a * \frac{di_a(t)}{dt} + R_a * i_a(t) + e(t) = v_a(t)$$

$$L_e * \frac{di_e(t)}{dt} + R_e * i_e(t) = v_e(t)$$

The back-emf can be exploit as a function of $i_e(t)$ as $e(t) = K_s * i_e(t) * \omega(t)$

The excitation current controls e(t) by changing the excitation flux ψ_e

(where $\psi_e = L_e * i_e$ while not saturating)

Mechanical part.

$$J * \frac{d\omega(t)}{dt} + \beta * \omega(t) = m_e(t) - m_l(t)$$

The torque can be exploit as function of $i_e(t)$ as well where $m_e(t) = K_s * i_e(t) * i_a(t)$

Separately Excited DC Motor

Excitation Circuit

To properly use the ferromagnetic material, the motor should operate at the knee of the magnetizing curve, i.e. at rated linked flux ψ_{ae}^{n}

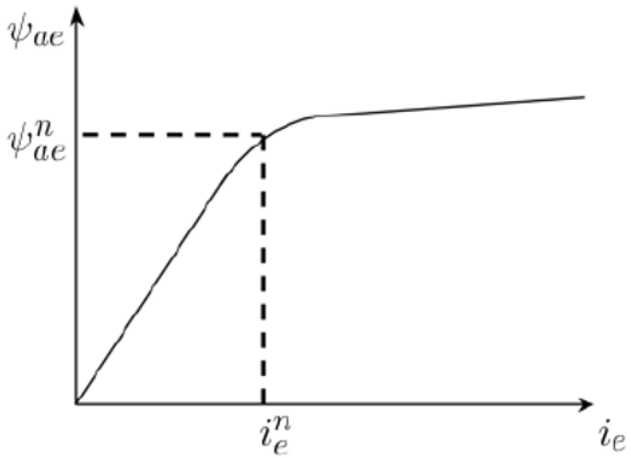

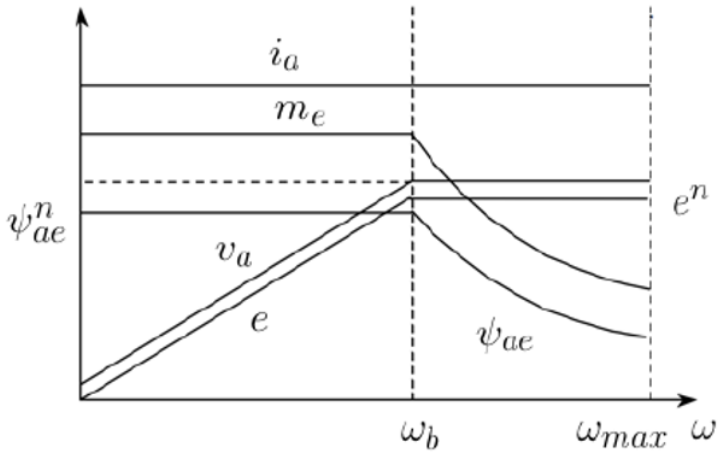

Operating region above the base speed: $\boldsymbol{\omega(t) > \omega_b}$

The voltage $v_a(t)$ has reached the rated voltage (converter saturation) so $e(t)$ has to remain constant ($e(t) = e^n$).

Assuming linearity between the excitation current and the linked flux, $i_e(t)$ needs to be controlled to compensate the effect of increasing $\omega(t)$ mantaining $e(t)$ constant. This causes the reduction of the linked flux. The whole strategy is named **flux weakening**.

Control of Excitation Circuit

Excitation Current vs Operating region and field weakening control

Exploiting the operating region behaviour:

If $\boldsymbol{\omega < \omega_b}$

$$i_e = i_e^n = cost \rightarrow e = K_s i_e^n \omega \rightarrow i_e = i_e^n$$

If $\boldsymbol{\omega > \omega_b}$

$$e = e^n = cost \rightarrow e = K_s i_e \omega \rightarrow i_e = e^n/(K_s \omega)$$

The control loop is:

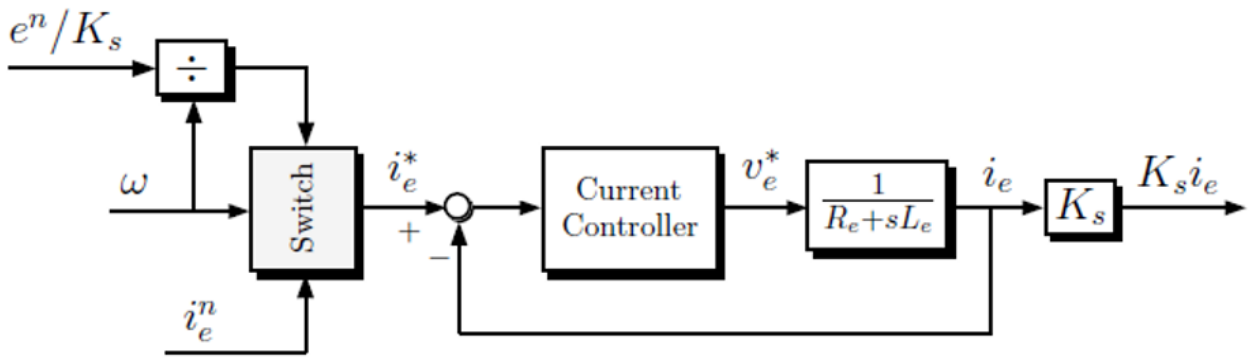

Note that the time constant $\tau_e = \frac{L_e}{R_e}$ is larger than $\tau_a = \frac{L_a}{R_a}$. This implies to wait until the excitation circuit has reached steady-state condition before to apply a speed reference command to the motor (starting condition)

Exercise

Speed Control of a SF-DC Motor for Traction

A DC separated excited motor is used to move a tramway vehicle with the following characteristics:

- Line voltage: 600 V
- Motor rated speed: 314 rad/s
- Efficiency: 0.9 (neglecting excitation lossed and iron losses)
- Armature circuit time constant 10 ms
- Excitation circuit rated voltage 120 V
- Excitation circuit rated current 1 A
- Excitation time constant 1 s

The tramway should accelerate from 0 to 60km/h in 25s. The tramway mass is 10T and you should consider 200 people as the tramway trainload with a standard wight of 80kg. The friction force is proportional to the speed and at rated speed (60km/h or 314rad/s) is 1/3 of traction force.

Exercise

Speed Control of a SF-DC Motor for Traction

- Find the design parameters of the DC motor according to the data.

- Design and simulate speed and current control in order to cover a 10km track considering the table I characteristics.

The slope is $s\% = 100 * tang(\vartheta)$

track	slope %	speed
$0 - 1\,km$	0	$35\ km/h$
$1 - 3\,km$	0	$60\ km/h$
$3 - 4\,km$	5%	$60\ km/h$
$4 - 6\,km$	0	$75\ km/h$
$6 - 8\,km$	0	$60\ km/h$
$8 - 9\,km$	−5%	$60\ km/h$
$9 - 10\ km$	0	$35\ km/h$

ATM project (Milan)